er ID 139411
ber 27, 2015 3:19:42 PM

139411

D6023-106

Accept *N900040100*

Setup Start *NS1*
Stop *NS2*

Item Name: Crosstube Material

Start Date: 11/27/2015 **Start Qty:** 23.00 *23*
Required Date: 4/29/2016 **Req'd Qty:** 23.00 *23*
Reference:

Cust Item ID:
Customer:

Approvals: **Process Plan:** MLS **Date:** 15-11-30 **Tooling:** _____ **Date:** _____
QC: _____ **Date:** _____ **SPC (Y/N):** _____ **Date:** _____

Run Start *NR1*
Stop *NR2*

Sequence ID/ Work Center ID	Operation Description	Set Up/ Run Hours	Tool ID	Tool #	Plan Code	Accept Qty	Reject Qty	Reject Number	Insp. Stamp
100	PURCHASING	0.00							
100		0.00							
Purchasing									
Purchasing									

Draw Nbr	Revision Nbr
D6023	A

Memo
Issue P/O 30644

CL DEC 03 2015 23

a) Extrude as per Dwg D6023
b) Material: 7075-T6/T6511 (WW-T-700/7 or QQ-A-225/9or QQ-A-200/11) seamless aluminum tube

c)Minimum ultimate tensile strength = 77 ksi

d)Minimum tensile yield strenght=66 ksi

e)Material certification is required

EXTREME CARE MUST BE TAKEN TO PROTECT THE OUTSIDE SURFACE OF THE TUBE. THE OUTSIDE SURFACE MUST BE SMOOTH AND FREE FROM SURFACE DEFECTS SUCH AS SCRATCHES, NICKS, OR DENTS.

MUST BE WELL PACKAGE, IF NOT IT WILL BE REFUSE

DQA: _____ Date: _____

WORK ORDER NON-CONFORMANCE / UPDATE

QA Closed: Date:

Work Order update only ☐

Work Order: _____ Part No. _____ NCR No.	**DISPOSITION** Rework ☐ Scrap ☐ Use-as-is ☐ Suspected Unapproved ☐	**AGAINST DEPARTMENT/PROCESS** Skid-tube ☐ Cross tube ☐ Water Jet ☐ Engineering ☐ Machining ☐ Small Fab ☐ Prod. Eng. Coor. ☐ Quality ☐ Thermoforming ☐ Finishing ☐ Rec/Store/Packaging ☐ Other ☐ Large Fab ☐ Composite ☐ Supplier ☐

Date :	Step #:	QTY Effective :	**MRB (QSI042) Approval**
Description Work Order Deviation		**Disposition**	**Completed By**
			Lead hand / Supervisor Approval Verification
			QC / QA Coordinator Approval

Root Cause

Environment	☐	☐	No Re-verfication
Design	☐	☐	Operator
Doc/Data	☐	☐	Offset/Setup
Equip/Tooling	☐	☐	Supplier
Handling/Pre	☐	☐	Training
Material	☐	☐	Use for Testing
Internal Transport	☐	☐	Poor Information
Tribal Knowledge	☐	☐	Rushing
LOA	☐	☐	Product Improvement
Substation	☐	☐	Process Improvement
Past Expiry Date	☐	☐	Manufacturing Process
Misidentified	☐	☐	Past Due

FAULT CATEGORY

☐ Pressure/Forced	☐ Temperature/Cure	☐ Power Loss/Surge	☐ Positioned Wrong
☐ Bending	☐ Set-up	☐ Folio/Program	☐ Outside Dimensions
☐ Centre Not Concentric	☐ BOM/Route	☐ Grain	☐ Over/Under tolerance
☐ Cracks	☐ Broken/Damage/Defect	☐ Weld	☐ Part Incorrect
☐ Crimp/Kink/Ripple/Wave	☐ Inspection Incomplete/Unqualified	☐ Wrong Stock Pulled	☐ Part Lost/Missing
☐ Cuffs	☐ Contamination	☐ Out of Sequence	☐ Part Moved
☐ Crushing	☐ Countersink	☐ Off-set	☐ Drawing
☐ Heat Treat	☐ Cut Too Short	☐ Mislabeled	☐ Finish
☐ Wave/Twist in Tube	☐ Instructions Incomplete/Unclear	☐ Fit/Function	☐ Misread
☐ Marks/Chatter	☐ Drill Holes	☐ Misaligned/off center	☐ Turning Sequence
☐ OTHER :			

Work Order ID 139411

Friday, November 27, 2015 3:19:42 PM

139411

Item ID: D6023-106

Revision ID:

Item Name: Crosstube Material

Start Date: 11/27/2015 **Start Qty:** 23.00 *23*

Required Date: 4/29/2016 **Req'd Qty:** 23.00 *23*

Reference:

Accept *N900040100*

Setup Start *NS1*

Stop *NS2*

Cust Item ID:

Customer:

Approvals: **Process Plan:** _____ **Date:** _____ **Tooling:** _____ **Date:** _____

QC: _____ **Date:** _____ **SPC (Y/N):** _____ **Date:** _____

Run Start *NR1*

Stop *NR2*

Sequence ID/ Work Center ID	Operation Description	Set Up/ Run Hours	Tool ID	Tool #	Plan Code	Accept Qty	Reject Qty	Reject Number	Insp. Stamp
110 *110* Packaging Packaging	Receive & Inspect for Damage & Mat'l Certs	0.00				24x	Sp	16-04-28	
	Memo Ensure material certification is attached	0.01							
120 *120* QC Quality Control	~~QC6~~ QC18 - Inspect dimensions to drawing	0.00							DAS 16 9-89
	Memo Ensure Material certification comply to Dwg D6023	0.00							2016/04/29
140 *140* Packaging Packaging	Identify as per dwg & Stock Location: LG003	0.00				24	Ø		
	Memo LOCATION : LG003	0.00							

Pto →

16/04/29

DART AEROSPACE

DQA: _____ Date: _____

WORK ORDER NON-CONFORMANCE / UPDATE

QA Closed: Date:

Work Order update only ✓

Work Order: 139411

Part No. D6023-106

NCR No.

DISPOSITION

- Rework ☐
- Scrap ☐
- Use-as-is ☐
- Suspected Unapproved ☐

AGAINST DEPARTMENT/PROCESS

Skid-tube	☐	Cross tube	☐	Water Jet	☐	Engineering	☐
Machining	☐	Small Fab	☐	Prod. Eng. Coor.	☐	Quality	☐
Thermoforming	☐	Finishing	☐	Rec/Store/Packaging	☐	Other	☐
Large Fab	☐	Composite	☐	Supplier	☐		

Date : 2016/04/28

Step #: 120

QTY Effective :

MRB (QSI042) Approval DAS 16 9-89 2016/04/28

Description Work Order Deviation

change step # 120 to QC 18 inspection

Disposition

→

Completed By 16-05-03

Lead hand / Supervisor Approval Verification

QC / QA Coordinator Approval DAS 16 9-89 2016/04/28

Root Cause

Environment	☐	☐	No Re-verfication
Design	☐	☐	Operator
Doc/Data	☐	☐	Offset/Setup
Equip/Tooling	☐	☐	Supplier
Handling/Pre	☐	☐	Training
Material	☐	☐	Use for Testing
Internal Transport	☐	☐	Poor Information
Tribal Knowledge	☐	☐	Rushing
LOA	☐	☐	Product Improvement
Substation	☐	☐	Process Improvement
Past Expiry Date	☐	☐	Manufacturing Process
Misidentified	☐	☐	Past Due

FAULT CATEGORY

☐	Pressure/Forced	☐	Temperature/Cure	☐	Power Loss/Surge	☐	Positioned Wrong
☐	Bending	☐	Set-up	☐	Folio/Program	☐	Outside Dimensions
☐	Centre Not Concentric	☐	BOM/Route	☐	Grain	☐	Over/Under tolerance
☐	Cracks	☐	Broken/Damage/Defect	☐	Weld	☐	Part Incorrect
☐	Crimp/Kink/Ripple/Wave	☐	Inspection Incomplete/Unqualified	☐	Wrong Stock Pulled	☐	Part Lost/Missing
☐	Cuffs	☐	Contamination	☐	Out of Sequence	☐	Part Moved
☐	Crushing	☐	Countersink	☐	Off-set	☐	Drawing
☐	Heat Treat	☐	Cut Too Short	☐	Mislabeled	☐	Finish
☐	Wave/Twist in Tube	☐	Instructions Incomplete/Unclear	☐	Fit/Function	☐	Misread
☐	Marks/Chatter	☐	Drill Holes	☐	Misaligned/off center	☐	Turning Sequence

☐ OTHER :

Work Order ID 139411

Friday, November 27, 2015 3:19:42 PM

139411

Item ID: D6023-106

Revision ID:

Item Name: Crosstube Material

Accept *N9000040100*

Setup Start *NS1*

Stop *NS2*

Start Date: 11/27/2015 **Start Qty:** 23.00 *23*

Required Date: 4/29/2016 **Req'd Qty:** 23.00 *23*

Reference:

Cust Item ID:

Customer:

Approvals: **Process Plan:** _____ **Date:** _____ **Tooling:** _____ **Date:** _____

QC: _____ **Date:** _____ **SPC (Y/N):** _____ **Date:** _____

Run Start *NR1*

Stop *NR2*

Sequence ID/ Work Center ID	Operation Description	Set Up/ Run Hours	Tool ID	Tool #	Plan Code	Accept Qty	Reject Qty	Reject Number	Insp. Stamp
150	QC21- Final Inspection - Work Order Release	0.00							
150									
QC	Memo	0.04							
Quality Control									

MAY 0 3 2016

Lm 16/05/02

DART AEROSPACE

DQA: _____ Date: _____

WORK ORDER NON-CONFORMANCE / UPDATE

QA Closed: Date:

Work Order update only ☐

Work Order: _____ Part No. _____ NCR No.	**DISPOSITION** Rework ☐ Scrap ☐ Use-as-is ☐ Suspected Unapproved ☐	**AGAINST DEPARTMENT/PROCESS** Skid-tube ☐ Cross tube ☐ Water Jet ☐ Engineering ☐ Machining ☐ Small Fab ☐ Prod. Eng. Coor. ☐ Quality ☐ Thermoforming ☐ Finishing ☐ Rec/Store/Packaging ☐ Other ☐ Large Fab ☐ Composite ☐ Supplier ☐

Date :	Step #:	QTY Effective :	MRB (QSI042) Approval

Description Work Order Deviation	Disposition	
		Completed By
		Lead hand / Supervisor Approval Verification
		QC / QA Coordinator Approval

Root Cause				FAULT CATEGORY			
Environment	☐	☐	No Re-verfication	☐ Pressure/Forced	☐ Temperature/Cure	☐ Power Loss/Surge	☐ Positioned Wrong
Design	☐	☐	Operator	☐ Bending	☐ Set-up	☐ Folio/Program	☐ Outside Dimensions
Doc/Data	☐	☐	Offset/Setup	☐ Centre Not Concentric	☐ BOM/Route	☐ Grain	☐ Over/Under tolerance
Equip/Tooling	☐	☐	Supplier	☐ Cracks	☐ Broken/Damage/Defect	☐ Weld	☐ Part Incorrect
Handling/Pre	☐	☐	Training	☐ Crimp/Kink/Ripple/Wave	☐ Inspection Incomplete/Unqualified	☐ Wrong Stock Pulled	☐ Part Lost/Missing
Material	☐	☐	Use for Testing	☐ Cuffs	☐ Contamination	☐ Out of Sequence	☐ Part Moved
Internal Transport	☐	☐	Poor Information	☐ Crushing	☐ Countersink	☐ Off-set	☐ Drawing
Tribal Knowledge	☐	☐	Rushing	☐ Heat Treat	☐ Cut Too Short	☐ Mislabeled	☐ Finish
LOA	☐	☐	Product Improvement	☐ Wave/Twist in Tube	☐ Instructions Incomplete/Unclear	☐ Fit/Function	☐ Misread
Substation	☐	☐	Process Improvement	☐ Marks/Chatter	☐ Drill Holes	☐ Misaligned/off center	☐ Turning Sequence
Past Expiry Date	☐	☐	Manufacturing Process				
Misidentified	☐	☐	Past Due	☐ OTHER :			

Picklist Print

Friday, November 27, 2015 3:19:46 PM

Work Order ID: 139411

139411

Parent Item: D6023-106

D6023-106

Parent Item Name: Crosstube Material

Start Date: 11/27/2015 **Required Date:** 4/29/2016

Start Qty: 23.00 **Required Qty:** 23.00

Comments: IPP REV:A 15.11.09 NEW ISSUE DD VERF:JLM

Component Item ID/ Item Name	Replacement Item ID	Mfg/ Purch	Bin Item	Primary Location	Last Location	Route Seq ID	Unit of Measure	Qty on Hand	Qty per Kit	Total Qty	Qty Issued	Date Issued	Status
D6023-106P *D6023-106P* Crosstube Material		Purchased	No				Each	0.0000	**	~~23~~ 24 24x	SP16-04-28		

DART AEROSPACE

DQA: _____ Date: _____

WORK ORDER NON-CONFORMANCE / UPDATE

QA Closed: Date:

Work Order update only ☐

Work Order: _____ Part No. _____ NCR No.	**DISPOSITION** Rework ☐ Scrap ☐ Use-as-is ☐ Suspected Unapproved ☐	**AGAINST DEPARTMENT/PROCESS** Skid-tube ☐ Cross tube ☐ Water Jet ☐ Engineering ☐ Machining ☐ Small Fab ☐ Prod. Eng. Coor. ☐ Quality ☐ Thermoforming ☐ Finishing ☐ Rec/Store/Packaging ☐ Other ☐ Large Fab ☐ Composite ☐ Supplier ☐

Date :	Step #:	QTY Effective :	**MRB (QSI042) Approval**
Description Work Order Deviation		**Disposition**	**Completed By**
			Lead hand / Supervisor Approval Verification
			QC / QA Coordinator Approval

Root Cause				**FAULT CATEGORY**			
Environment	☐	☐	No Re-verfication	☐ Pressure/Forced	☐ Temperature/Cure	☐ Power Loss/Surge	☐ Positioned Wrong
Design	☐	☐	Operator	☐ Bending	☐ Set-up	☐ Folio/Program	☐ Outside Dimensions
Doc/Data	☐	☐	Offset/Setup	☐ Centre Not Concentric	☐ BOM/Route	☐ Grain	☐ Over/Under tolerance
Equip/Tooling	☐	☐	Supplier	☐ Cracks	☐ Broken/Damage/Defect	☐ Weld	☐ Part Incorrect
Handling/Pre	☐	☐	Training	☐ Crimp/Kink/Ripple/Wave	☐ Inspection Incomplete/Unqualified	☐ Wrong Stock Pulled	☐ Part Lost/Missing
Material	☐	☐	Use for Testing	☐ Cuffs	☐ Contamination	☐ Out of Sequence	☐ Part Moved
Internal Transport	☐	☐	Poor Information	☐ Crushing	☐ Countersink	☐ Off-set	☐ Drawing
Tribal Knowledge	☐	☐	Rushing	☐ Heat Treat	☐ Cut Too Short	☐ Mislabeled	☐ Finish
LOA	☐	☐	Product Improvement	☐ Wave/Twist in Tube	☐ Instructions Incomplete/Unclear	☐ Fit/Function	☐ Misread
Substation	☐	☐	Process Improvement	☐ Marks/Chatter	☐ Drill Holes	☐ Misaligned/off center	☐ Turning Sequence
Past Expiry Date	☐	☐	Manufacturing Process				
Misidentified	☐	☐	Past Due	☐ OTHER :			

SPECIFICATION CONTROL DRAWING

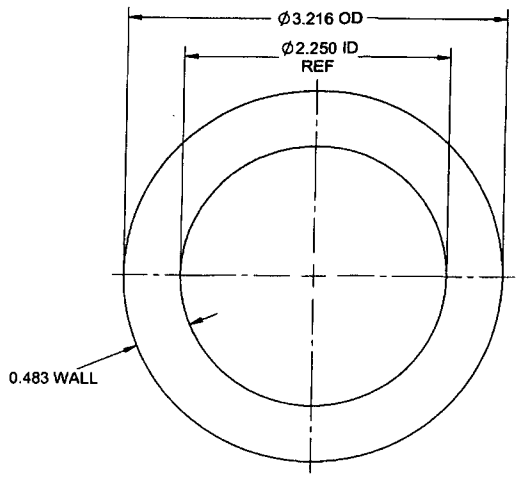

139411 MLS
15-11-30

D6023-XXX CROSSTUBE MATERIAL

WHERE XXX IS LENGTH IN INCHES.
EG. 106" LONG TUBE: D6023-106

NOTES:
1) MATERIAL: 3.216 OD X 0.483 WALL 7075-T6/T6511 (WW-T-700/7 OR QQ-A-225/9 OR QQ-A-200/11) SEAMLESS ALUMINUM TUBE.
MINIMUM ULTIMATE TENSILE STRENGTH = 77 KSI
MINIMUM YIELD TENSILE STRENGTH = 66KSI
2) FINISH: NONE
3) TOLERANCES: PER ASTM B210 AS FOLLOWS:
O.D.: +/- 0.008 MEAN (+/- 0.016 INCLUDING OVALITY)
WALL.: +/-0.021 MEAN (+/- 0.048 INCLUDING ECCENTRICITY)
LENGTH: XXX +0.188/-0.000
STRAIGHTNESS: 0.010" DEVIATION / 12" LENGTH
4) UNITS: INCHES UNLESS OTHERWISE NOTED
5) BREAK SHARP EDGES: N/A
6) IDENTIFICATION: NONE
7) WEIGHT: N/A
8) EXTREME CARE MUST BE TAKEN TO PROTECT THE OUTSIDE SURFACE OF THE TUBE. THE OUTSIDE SURFACE MUST BE SMOOTH AND FREE FROM SURFACE DEFECTS SUCH AS SCRATCHES, NICKS, OR DENTS. DEFECTS UP TO 0.005" MAY BE BLENDED OUT LONGITUDINALLY. CIRCUMFERENTIAL GRIND MARKS ARE UNACCEPTABLE.

RELEASED
2015 -11- 04
BN 15-692

APPROVED

REV.	DESCRIPTION	BY	DATE
A	NEW ISSUE	AP	15.10.13

DESIGN	AP	DART AEROSPACE LTD HAWKESBURY, ONTARIO, CANADA
DRAWN	AP	
CHECKED	AJS	DRAWING NO. D6023 — REV. A — SHEET 1 OF 1
MFG. APPR.	JLM	
APPROVED	WM	TITLE: CROSSTUBE MATERIAL — SCALE: NTS
DE APPR.	DS	
DATE	15.10.13	

DART AEROSPACE

DQA: _____ Date: _____

WORK ORDER NON-CONFORMANCE / UPDATE

QA Closed: Date:

Work Order update only ☐

Work Order: _____ Part No. _____ NCR No.	**DISPOSITION** Rework ☐ Scrap ☐ Use-as-is ☐ Suspected Unapproved ☐	**AGAINST DEPARTMENT/PROCESS** Skid-tube ☐ Cross tube ☐ Water Jet ☐ Engineering ☐ Machining ☐ Small Fab ☐ Prod. Eng. Coor. ☐ Quality ☐ Thermoforming ☐ Finishing ☐ Rec/Store/Packaging ☐ Other ☐ Large Fab ☐ Composite ☐ Supplier ☐

Date :	Step #:	QTY Effective :	MRB (QSI042) Approval

Description Work Order Deviation	Disposition	
		Completed By
		Lead hand / Supervisor Approval Verification
		QC / QA Coordinator Approval

Root Cause				FAULT CATEGORY			
Environment	☐	☐	No Re-verfication	☐ Pressure/Forced	☐ Temperature/Cure	☐ Power Loss/Surge	☐ Positioned Wrong
Design	☐	☐	Operator	☐ Bending	☐ Set-up	☐ Folio/Program	☐ Outside Dimensions
Doc/Data	☐	☐	Offset/Setup	☐ Centre Not Concentric	☐ BOM/Route	☐ Grain	☐ Over/Under tolerance
Equip/Tooling	☐	☐	Supplier	☐ Cracks	☐ Broken/Damage/Defect	☐ Weld	☐ Part Incorrect
Handling/Pre	☐	☐	Training	☐ Crimp/Kink/Ripple/Wave	☐ Inspection Incomplete/Unqualified	☐ Wrong Stock Pulled	☐ Part Lost/Missing
Material	☐	☐	Use for Testing	☐ Cuffs	☐ Contamination	☐ Out of Sequence	☐ Part Moved
Internal Transport	☐	☐	Poor Information	☐ Crushing	☐ Countersink	☐ Off-set	☐ Drawing
Tribal Knowledge	☐	☐	Rushing	☐ Heat Treat	☐ Cut Too Short	☐ Mislabeled	☐ Finish
LOA	☐	☐	Product Improvement	☐ Wave/Twist in Tube	☐ Instructions Incomplete/Unclear	☐ Fit/Function	☐ Misread
Substation	☐	☐	Process Improvement	☐ Marks/Chatter	☐ Drill Holes	☐ Misaligned/off center	☐ Turning Sequence
Past Expiry Date	☐	☐	Manufacturing Process				
Misidentified	☐	☐	Past Due	☐ OTHER :			

DART AEROSPACE

ART AEROSPACE

Dart Aerospace Ltd.
1270 Aberdeen Street
Hawkesbury, ON K6A 1K7
Tel: 613 632 9577
Fax: 613 632 1053

PURCHASE ORDER

Purchase Order ID PO30644

Purchase Order Date 12/3/2015
PO Print Date 1/6/2016

Order From : VU-ALU001

ALUMINIUMWERK UNNA AG
630 3033 SOUTH PARKER RD
AURORA, CO 80014
USA

Ship To : DART AEROSPACE LTD

1270 ABERDEEN
HAWKESBURY, ON K6A 1K7
CANADA

Contact Name		**Buyer**	Chantal Lavoie
Vendor Phone	303 755 5672	**Customer POID**	
		Customer Tax #	10127-2607
Ship To Contact		**Terms**	Wire
Ship To Phone		**Currency**	USD
Ship Via:	Contract Shipping	**FOB**	DDP – (Delivered Duty Paid)
Ship Acct:			

Line Total: **$12,720.00**

7	D6014-090P	Aluminum Extrusion	5/2/2016 Yes 5/2/2016	28.00 Each		$524.00	$14,672.00

EXTRUDE AS PER DWG D6014-090 REV. A
B139426

Line Total: **$14,672.00**

8	D6023-106P	Crosstube Material	5/2/2016 Yes 5/2/2016	23.00 Each		$749.00	$17,227.00

EXTRUDE AS PER DWG D6023-106 REV. A
B139411

Recu 2016-04-28

Line Total: **$17,227.00**

9	D6024-103P	Crosstube Material	5/2/2016 Yes 5/2/2016	44.00 Each		$374.00	$16,456.00

EXTRUDE AS PER DWG D6024-103 REV. A
B139410

PO Instructions: QUOTE DEL. 2016-2017 (002)

Note:

ALUnna

Packinglist ALUnna AG

ALUnna ref. no.	59326/800
Customer PO.	PO. 30644
Date:	03.30.16

Boxmarking:

Dart Aerospace PO. 30644 D6023-106
Made in Germany
Dest. Hawkesbury Ont., Canada

We hereby declare that the wooden packing material are totally free from bark and apparently free from live plant pests

Item no.	Box no.	OD (inch)	ID (inch)	Wall (inch)	Net Weight (lbs)	Tare lbs	Gross Weight	Pieces	lengths (ft)	Boxdimension Lengths (inch)	Width (inch)	height (inch)	Cast. / Heat No. Top	Pcs.	Cast. / Heat No. Middle	Pcs.	Cast. / Heat No. Bottom	Pcs.
800	1	3,200	2,250	0,475	1063	236	1298	24	9	151,575	22,441	22,441			4480/804615	24		
					1063	236	1298	24				1,251 m³						

Sp16-04-28

I:\Allgemein\USAPacklisten\59326_800

ALUnna TUBES

order confirmation 59326

date: 1.06.2016
customer 40980

inspection cert.acc. to EN10204/3.1 / RM 469 / Rp0,2: 393
straightness 0,01 INCH / 1 FEET / RMS max.: outer 25
tol. on quantity +10 % -10 %
3.750" OD 0.375" Wall, 90" lengths
Part Number D6014-090 skidtube
Tolerances per ASTM B210
Outside surface: max. defects up to 0.005" (longitudinally)
Tubes protected with corrosion protective oil
Tubes line marked
Packing: seaworthy wooden cases

item	quantity	unitprice	USD	unit value	USD	delivery
800	23,000 PC	749,00	PC	17.227,00		May 02, 2016

Recurzex SP16 01-28.

AWU article: 50631 / Tariff no. 76082081
Customer article: D6023-106P
product: Tubes / seamless extruded / EN AW-7075 / round
condition: T 6511 / AMS-QQ-A-200/11(A)

outer diameter:	3,200	INCH Tol.	+0,016	-0,016
tol.for mean OD			+0,008	-0,008
inner diameter:	2,250	INCH		
wall thickness:	0,475	INCH Tol.	+0,047	-0,047
fixed length	106,000	INCH Tol.	+0,125	

inspection cert.acc. to EN10204/3.1 / RM 531 / Rp0,2: 455
straightness 0,01 INCH / 1 FEET / RMS max.: outer 25
tol. on quantity +15 % -15 % / with packing list / scurfed
3.200" OD 0.475" Wall, 106" lengths
Part Number D6023-106P crosstube
Surface Finish max. RMS 25
Tolerances per ASTM B210 / drawing D6023
Tubes protected with corrosion protective oil
Tubes line marked
.
Packing: seaworthy wooden cases

item	quantity	unitprice	USD	unit value	USD	delivery
900	44,000 PC	374,00	PC	16.456,00		May 02, 2016

AWU article: 50632 / Tariff no. 76082081
Customer article: D6024-103P
product: Tubes / seamless extruded / EN AW-7075 / round
condition: T 6511 / AMS-QQ-A-200/11(A)

outer diameter:	2,600	INCH Tol.	+0,012	-0,012
tol.for mean OD			+0,006	-0,006
inner diameter:	2,000	INCH		
wall thickness:	0,300	INCH Tol.	+0,030	-0,030

[illegible] Allgemeine [illegible] und Lieferbedingungen –
(Fassung für den [illegible] Verkehr)

1 [illegible] Vertragsinhalt

7 Schutzrechte Dritter

8 [illegible] Abnahme und Abrufe

2 [illegible]

11 Zahlungsbedingungen

3 [illegible]

4 [illegible]

5 [illegible]

9 Kreditversicherung

6 [illegible]

12 Schlußbestimmungen

10 Eigentumsvorbehalt

ALUnna TUBES

consignee : **DART AEROSPACE LTD.**
HAWKESBURY

client: 40980

confirmation # : **59326/800**

purchase order : PO30644

AWU article : 50631 /3,200 x ,475 x 106,000 - ,000 I

client article : D6023-106P

alloy : EN AW-7075 Int. Alloy No. : 7075

quantity : 24 gross : 589,000 Kg
length : 2.692,00 MM net : 482,000 Kg
package id : 128019 piece : 1 case no. : 1

pcs. / length / cast no. / heat no
24x2692,00/4480 - 804615

information :
supplier : Aluminiumwerk Unna AG Uelzener Weg 36 - D-59425
contact : fon +49(0)2303-206- 0 fax +49(0)2303-206-116
date : 11.03.2016

ALUnna TUBES

Abnahmeprüfzeugnis 3.1 - DIN EN 10204:2005

Inspection Certificate 3.1 - DIN EN 10204:2005 / Certificat de Reception 3.1- DIN EN 10204:2005

Kunde: Dart Aerospace Ltd.
Client:

1270 Aberdeen Street
K6A1K7 Hawkesbury, ON Canada

Zeugnisnummer: 293/16
Cert No.: / No. du certificat:

Bestellnummer: PO30644
Order No. / No. de commande

Produkt: Rohre nahtlos gepresst
Product / Produit: *Tubes seamless extruded*

Auftrag: 59326/800
Our Reference/Notre Reference:

Spezifikation: AMS - QQ - A - 200/11A; -
Specification:

Werkstoff: 7075
Alloy/Alliage:

Zustand: T 6511
Temper/État

Abmessung 3,200 INCH x 2,250 INCH x 0,475 INCH x 106,000 INCH
Size / Dimension D6023-106P

Kennzeichnung ALUnna - Cert. No. 293/16 - 7075 - T 6511 - Cast No. 4480 - AMS - QQ-A- 200/11 A - 3.2000" OD X 0.475" Wall - Heat Lot No. 804615 - ALUnna Order Conf. No. 59326/800-1-P.O. 30644
Marking/Marquage:

Lieferung pcs. 24 lbs 1063
Delivered Material / Matérial délivre:

Country of Manufacture: Germany
Products are in accordance with applicable RoHS

1. Chemische Analyse *Chemical Analysis / analyse chimique*

Charge/ Cast No.		Si	Fe	Cu	Mn	Mg	Cr	Zn	Ti	Pb	Zr	Bi	Sn	Ni	Na
	min.			1,2		2,1	0,18	5,1							
	max.	0,40	0,50	2,0	0,30	2,9	0,28	6,1	0,20						
4480/15		0,187	0,187	1,521	0,097	2,573	0,200	5,583	0,037	0,003	0,0174	0,0001	0,0015	0,0050	0,0004

Hydrogen content: 0,12 **ccm/100 g Al** Elements without indication < 0,01 % **country of melt manufacturer: Germany**

2. Mechanische Eigenschaften *Mechanical Properties / Valeurs Mécaniques*

Anforderungen Requirements	tensile (Rm) ksi	yield (Rp0,2) ksi	elongation 2" %	elongation A %	Hardness HB	Heat Lot No.
	81,0	73,0	7,0			
1	84,680	76,850	10,0			804615
2	83,230	75,110	10,0			

RMS: outside 25 - max. 14,1 µ"

DAS
16
9-89

20164/29

Ergebnis der Prüfungen: Es wird bestätigt, daß die Lieferung geprüft wurde und den Vereinbarungen bei der Bestellannahme entspricht

Test results: We confirm that the delivery has been tested and applies to the agreements made on receipt of the order

Resultats: Nous confirmons que la livraison a été controlée et correspond avec les conventions faites à la réception de la commande

mergardtri

14.03.2016

Certified acc. DIN EN ISO 9001:2008 and DIN EN 9100:2009
valid until 2016-11-10
Cert.- Reg. No.: 001959 QM08; 001959 ASH 09-1

ALUnna

Abnahmebeauftragter

Aluminiumwerk Unna AG, Uelzener Weg 36, 59425 Unna, Germany

MATERIAL RECEIPT INSPECTION FORM

MATERIAL: A6023-106
DATE: 2016/04/28

PO / BATCH NO.: PO 30644 / BB9411

MATERIAL CERT REC'D: YES
QUANTITY RECEIVED: 23 PCS
QUANTITY INSPECTED: 12 PCS
QUANTITY REJECTED:

THICKNESS ORDERED: SEE ATTACHED Extrusion
THICKNESS RECEIVED: Report
SHEET SIZE ORDERED: n/a
SHEET SIZE RECEIVED: n/a

DESCRIPTION	NCR (Check Y/N)		COMMENTS
SURFACE DAMAGE	Y	N	
CORRECT FINISH	Y	N	
CORROSION	Y	N	
CORRECT GRAIN DIRECTION	Y	N	
CORRECT MATERIAL	Y	N	7075T6
CORRECT THICKNESS	Y	N	SEE ATTACHED Extrusion Report
PHOTO REQUIRED	Y	N	
CORRECT MATERIAL	Y	N	AMS QQ-A-200
CORRECT REF # TO LINK CERT	Y	N	PO 30644
CORRECT MATERIAL IDENTFICATION	Y	N	N/A
CORRECT M# ON THE MATERIAL	Y	N	n/a
DOES THIS MATERIAL REQUIRE ENGINEERING SIGN OFF	Y	N	
DOES THIS REQUIRE AN EXTRUSION REPORT	Y	N	

CUT SAMPLE PIECE OF MATERIAL AND PREFORM A HARDNESS CHECK. RECORD RESULTS BELOW					
	HRC	HRB	DUR A	DUR D	
TYPE OF MATERIAL					N/A
SIZE OF TEST SAMPLE					
HARDNESS / DUROMETER READING					

testers located in the Quality Office

QC 18 INSPECTION	ENGINEERING SIGNOFF (if required)
INSPECTED BY: 16 ~~9-89~~	SIGNED OFF BY:
DATE: 2016/04/28	DATE:

Attach this inspection sheet with the corresponding material cert and remit to be scanned and received in

MATERIAL RECEIPT INSPECTION FORM

INSTRUCTIONS FOR INSPECTING BAR, TUBING, ROUND, & SHEET STOCK

1- VERIFY STOCK TO DART PURCHASE ORDER
2- MEASURE ALL DIMENSIONS FOR EACH PURCHASED STOCK
   a. WIDTH, THICKNESS, DIAMETER, WALL THICKNESS & LENGTH
3- VERIFY CONDITION OF MATERIAL i.e. DAMAGED, CORRODED, etc.
4- VERIFY THAT SUPPLIER HAS A NUMBER (HEAT #) ON ITS RECEIVING REPORT TO LINK TO MATERIAL CERTS
5- VERIFY MATERIAL CERTS ARE CORECT TO THE DART PO INSTRUCTIONS
6- REMOVE / CUT A PIECE OF MATERIAL FOR SAMPLE HARDNESS TESTING

INSTRUCTIONS FOR INSPECTING SKIDTUBE & STEP EXTRUSION

1- VERIFY TO DART SUPPLIED DRAWING
2- SAMPLE INSPECT MATERIAL IN BUNDLE TO ENSURE MATERIAL CAN BE RECEIVIED INTO DART
3- USING PORTABLE HARDNESS TESTER VERIFY HARDNESS OF THE MATERIAL TO THE DRAWING
4- VERIFY THAT MATERIAL CERTS MATCH TO WHATS CALLED UP ON THE DART DRAWING

AFTER MATERIAL PASSES INSPECTION

5- HAVE DART EMPLOYEES START STOCKING MATERIAL BUT REQUEST MIN **20pcs** FOR FULL INSPECTION
6- INSPECT ALL DIMS AS PER DRAWING REQUIRMENTS

INSTRUCTIONS FOR INSPECTING CROSS TUBE MATERIAL

1- VERIFY MATERIAL CERTS MATCH THE REQUIRMENTS ON THE DART DRAWINGS
2- INSPECT MIN. HALF THE BATCH OF EXTRUSION RECEIVIED INTO DART
3- INSPECT MATERIAL AS PER THE EXTRUSION REPORT
   a. WALL THICKNESS USING ULTRA-SONIC IN 4 LOCATIONS
   b. OUTSIDE DIAMETETER HIGHEST/LOWEST BOTH ENDS
   c. INSIDE DIAMETER HIGHEST/LOWEST BOTH ENDS
   d. STRAIGHTNESS @ CENTER OVER 12" SPAN
   e. WALL THICKNESS USING TUBE MICROMETER HIGHEST/LOWEST BOTH ENDS
4- IDENTFY EACH TUBE IN SEQUENCE OF INSPECTING (TUBE 1, TUBE2.....) AND W/O# AND PO#
5- RECORD ALL FINDINGS ON EXTRUSION REPORT

IF ANY QUESTIONS PLEASE SEE QC CORRDINATOR BEFORE GOING FURTHER

EXTRUSION INSPECTION SHEET

DART AEROSPACE

Measurment unit *Inches* Symbol "

		SIDE A		SIDE B							ULTRA SONIC MEASURMENTS				
TUBE #	TOTAL LENGTH	DIA R1	DIA R2	DIA R1	DIA R2	INSIDE DIA	wall thickness measured w/vern		Strightness at 12"in middle	Rockwell Reading	LOCATION on tube	R1	R2	R3	R4
DWG	106"	3.216"				2.25"	0.438"		0.01"	N/A	Middle	N/A			
1	106"	3.191"	3.191"	3.199"	3.201"	2.228"	0.476"	0.488"	0.002"	N/A	Middle	0.485"	0.478"	0.484"	0.486"
2	106"	3.196"	3.197"	3.199"	3.2"	2.225"	0.476"	0.483"	0.001"	N/A	Middle	0.484"	0.48"	0.481"	0.487"
3	106"	3.194"	3.2"	3.198"	3.201"	2.229"	0.478"	0.48"	0.001"	N/A	Middle	0.48"	0.485"	0.48"	0.483"
4	106"	3.2"	3.205"	3.202"	3.201"	2.221"	0.469"	0.481"	0.004"	N/A	Middle	0.472"	0.475"	0.496"	0.497"
5	106"	3.189"	3.192"	3.191"	3.192"	2.231"	0.47"	0.46"	0.003"	N/A	Middle	0.488"	0.485"	0.468"	0.473"
6	106"	3.188"	3.197"	3.195"	3.197"	2.234"	0.461"	0.482"	0.003"	N/A	Middle	0.487"	0.479"	0.476"	0.485"
7	106"	3.2"	3.201"	3.2"	3.203"	2.234"	0.468"	0.491"	0.001"	N/A	Middle	0.473"	0.485"	0.492"	0.486"
8	106"	3.199"	3.2"	3.198"	3.202"	2.228"	0.495"	0.475"	0.003"	N/A	Middle	0.472"	0.495"	0.496"	0.471"
9	106"	3.199"	3.2"	3.199"	3.204"	2.223"	0.478"	0.491"	0.009"	N/A	Middle	0.483"	0.482"	0.487"	0.486"
10	106"	3.201"	3.203"	3.203"	3.204"	2.226"	0.479"	0.488"	0.004"	N/A	Middle	0.485"	0.476"	0.486"	0.495"
11	106"	3.199"	3.201"	3.198"	3.204"	2.233"	0.476"	0.483"	0.007"	N/A	Middle	0.485"	0.485"	0.483"	0.487"
12	106"	3.186"	3.198"	3.189"	3.192"	2.233"	0.473"	0.486"	0.009"	N/A	Middle	0.476"	0.481"	0.478"	0.473"
13	"	"	"	"	"	"	"	"	"	N/A	Middle	"	"	"	"
14	"	"	"	"	"	"	"	"	"	N/A	Middle	"	"	"	"
15	"	"	"	"	"	"	"	"	"	N/A	Middle	"	"	"	"
16	"	"	"	"	"	"	"	"	"	N/A	Middle	"	"	"	"
PART # D6023-106		P/O# 30644					BATCH # B139411				Notes:				

DAS
16
~~9-89~~ 2016/04/27

MEAN OUTSIDE DIAMETER PERMISSIBLE +- 0.006 side A

Tube #	Actual A	Actual B	Mean	Nominal	Tolerance	min allowable dimension	max allowable dimension	Results for min allowable	Results for max allowable
1	3.191	3.191	3.191	0.00	0.006	-0.006	0.006	3.197	3.185
2	3.196	3.197	3.197	0.00	0.006	-0.006	0.006	3.203	3.191
3	3.194	3.200	3.197	0.00	0.006	-0.006	0.006	3.203	3.191
4	3.200	3.205	3.203	0.00	0.006	-0.006	0.006	3.209	3.197
5	3.189	3.192	3.191	0.00	0.006	-0.006	0.006	3.197	3.185
6	3.188	3.197	3.193	0.00	0.006	-0.006	0.006	3.199	3.187
7	3.200	3.201	3.201	0.00	0.006	-0.006	0.006	3.207	3.195
8	3.199	3.200	3.200	0.00	0.006	-0.006	0.006	3.206	3.194
9	3.199	3.200	3.200	0.00	0.006	-0.006	0.006	3.206	3.194
10	3.201	3.203	3.202	0.00	0.006	-0.006	0.006	3.208	3.196
11	3.199	3.201	3.200	0.00	0.006	-0.006	0.006	3.206	3.194
12	3.186	3.198	3.192	0.00	0.006	-0.006	0.006	3.198	3.186

MEAN OUTSIDE DIAMETER PERMISSIBLE +- 0.006 Side B

Tube #	Actual A	Actual B	Mean	Nominal	Tolerance	min allowable dimension	max allowable dimension	Results for min allowable	Results for max allowable
1	3.199	3.201	3.200	0.00	0.006	-0.006	0.006	3.206	3.194
2	3.199	3.200	3.200	0.00	0.006	-0.006	0.006	3.206	3.194
3	3.198	3.201	3.200	0.00	0.006	-0.006	0.006	3.206	3.194
4	3.202	3.201	3.202	0.00	0.006	-0.006	0.006	3.208	3.196
5	3.191	3.192	3.192	0.00	0.006	-0.006	0.006	3.198	3.186
6	3.195	3.197	3.196	0.00	0.006	-0.006	0.006	3.202	3.190
7	3.200	3.203	3.202	0.00	0.006	-0.006	0.006	3.208	3.196
8	3.198	3.202	3.200	0.00	0.006	-0.006	0.006	3.206	3.194
9	3.199	3.204	3.202	0.00	0.006	-0.006	0.006	3.208	3.196
10	3.203	3.204	3.204	0.00	0.006	-0.006	0.006	3.210	3.198
11	3.198	3.204	3.201	0.00	0.006	-0.006	0.006	3.207	3.195
12	3.189	3.192	3.191	0.00	0.006	-0.006	0.006	3.197	3.185

OUTSIDE DIA. Permissible (with Ovality) +- 0.012 side A

Tube #	Actual A	Nominal	Tolerance	min allowable dimension	max allowable dimension	Results for min allowable	Results for max allowable
1	3.191	0.000	0.012	-0.012	0.012	3.203	3.179
2	3.196	0.000	0.012	-0.012	0.012	3.208	3.184
3	3.194	0.000	0.012	-0.012	0.012	3.206	3.182
4	3.200	0.000	0.012	-0.012	0.012	3.212	3.188
5	3.189	0.000	0.012	-0.012	0.012	3.201	3.177
6	3.188	0.000	0.012	-0.012	0.012	3.200	3.176
7	3.200	0.000	0.012	-0.012	0.012	3.212	3.188
8	3.199	0.000	0.012	-0.012	0.012	3.211	3.187
9	3.199	0.000	0.012	-0.012	0.012	3.211	3.187
10	3.201	0.000	0.012	-0.012	0.012	3.213	3.189
11	3.199	0.000	0.012	-0.012	0.012	3.211	3.187
12	3.186	0.000	0.012	-0.012	0.012	3.198	3.174

OUTSIDE DIA. Permissible (with Ovality) +- 0.012 side A

Tube #	Actual B	Nominal	Tolerance	min allowable dimension	max allowable dimension	Results for min allowable	Results for max allowable
1	3.191	0.000	0.012	-0.012	0.012	3.203	3.179
2	3.197	0.000	0.012	-0.012	0.012	3.209	3.185
3	3.200	0.000	0.012	-0.012	0.012	3.212	3.188
4	3.205	0.000	0.012	-0.012	0.012	3.217	3.193
5	3.192	0.000	0.012	-0.012	0.012	3.204	3.180
6	3.197	0.000	0.012	-0.012	0.012	3.209	3.185
7	3.201	0.000	0.012	-0.012	0.012	3.213	3.189
8	3.200	0.000	0.012	-0.012	0.012	3.212	3.188
9	3.200	0.000	0.012	-0.012	0.012	3.212	3.188
10	3.203	0.000	0.012	-0.012	0.012	3.215	3.191
11	3.201	0.000	0.012	-0.012	0.012	3.213	3.189
12	3.198	0.000	0.012	-0.012	0.012	3.210	3.186

OUTSIDE DIA. Permissible (with Ovality) +- 0.012 side b

Tube #	Actual A	Nominal	Tolerance	min allowable dimension	max allowable dimension	Results for min allowable	Results for max allowable
1	3.199	0.000	0.012	-0.012	0.012	3.211	3.187
2	3.199	0.000	0.012	-0.012	0.012	3.211	3.187
3	3.198	0.000	0.012	-0.012	0.012	3.210	3.186
4	3.202	0.000	0.012	-0.012	0.012	3.214	3.190
5	3.191	0.000	0.012	-0.012	0.012	3.203	3.179
6	3.195	0.000	0.012	-0.012	0.012	3.207	3.183
7	3.200	0.000	0.012	-0.012	0.012	3.212	3.188
8	3.198	0.000	0.012	-0.012	0.012	3.210	3.186
9	3.199	0.000	0.012	-0.012	0.012	3.211	3.187
10	3.203	0.000	0.012	-0.012	0.012	3.215	3.191
11	3.198	0.000	0.012	-0.012	0.012	3.210	3.186
12	3.189	0.000	0.012	-0.012	0.012	3.201	3.177

OUTSIDE DIA. Permissible (with Ovality) +- 0.012 side b

Tube #	Actual B	Nominal	Tolerance	min allowable dimension	max allowable dimension	Results for min allowable	Results for max allowable
1	3.199	0.000	0.012	-0.012	0.012	3.211	3.187
2	3.199	0.000	0.012	-0.012	0.012	3.211	3.187
3	3.198	0.000	0.012	-0.012	0.012	3.210	3.186
4	3.202	0.000	0.012	-0.012	0.012	3.214	3.190
5	3.191	0.000	0.012	-0.012	0.012	3.203	3.179
6	3.195	0.000	0.012	-0.012	0.012	3.207	3.183
7	3.200	0.000	0.012	-0.012	0.012	3.212	3.188
8	3.198	0.000	0.012	-0.012	0.012	3.210	3.186
9	3.199	0.000	0.012	-0.012	0.012	3.211	3.187
10	3.203	0.000	0.012	-0.012	0.012	3.215	3.191
11	3.198	0.000	0.012	-0.012	0.012	3.210	3.186
12	3.189	0.000	0.012	-0.012	0.012	3.201	3.177

end measuement with vern

Mean OUTSIDE DIA. Permissible +- 0.015									
Tube	Actual A	Actual B	Mean	Nominal	Tolerance	min	max	min	max
1	0.476	0.488	0.482	0.375	0.015	0.360	0.390	0.122	0.092
2	0.476	0.483	0.480	0.375	0.015	0.360	0.390	0.1195	0.090
3	0.478	0.480	0.479	0.375	0.015	0.360	0.390	0.119	0.089
4	0.469	0.481	0.475	0.375	0.015	0.360	0.390	0.115	0.085
5	0.470	0.460	0.465	0.375	0.015	0.360	0.390	0.105	0.075
6	0.461	0.482	0.472	0.375	0.015	0.360	0.390	0.1115	0.082
7	0.468	0.491	0.480	0.375	0.015	0.360	0.390	0.1195	0.090
8	0.495	0.475	0.485	0.375	0.015	0.360	0.390	0.125	0.095
9	0.478	0.491	0.485	0.375	0.015	0.360	0.390	0.1245	0.095
10	0.479	0.488	0.484	0.375	0.015	0.360	0.390	0.1235	0.094
11	0.476	0.483	0.480	0.375	0.015	0.360	0.390	0.1195	0.090
12	0.473	0.486	0.480	0.375	0.015	0.360	0.390	0.1195	0.090

OUTSIDE DIA. Permissible +- 0.038								
Tube	Actual A	Actual B	Nominal	Tolerance	min	max	min	max
1	0.476	0.488	0.375	0.038	0.337	0.413	0.139	0.075
2	0.476	0.483	0.375	0.038	0.337	0.413	0.139	0.070
3	0.478	0.480	0.375	0.038	0.337	0.413	0.141	0.067
4	0.469	0.481	0.375	0.038	0.337	0.413	0.132	0.068
5	0.470	0.460	0.375	0.038	0.337	0.413	0.133	0.047
6	0.461	0.482	0.375	0.038	0.337	0.413	0.124	0.069
7	0.468	0.491	0.375	0.038	0.337	0.413	0.131	0.078
8	0.495	0.475	0.375	0.038	0.337	0.413	0.158	0.062
9	0.478	0.491	0.375	0.038	0.337	0.413	0.141	0.078
10	0.479	0.488	0.375	0.038	0.337	0.413	0.142	0.075
11	0.476	0.483	0.375	0.038	0.337	0.413	0.139	0.070
12	0.473	0.486	0.375	0.038	0.337	0.413	0.136	0.073

center measurment with ultra sonic

Mean OUTSIDE DIA. Permissible +- 0.015									
Tube	highest	lowest	Mean	Nominal	Tolerance	min	max	min	max
1	0.486	0.478	0.482	0.375	0.015	0.360	0.390	0.122	0.092
2	0.487	0.480	0.484	0.375	0.015	0.360	0.390	0.1235	0.094
3	0.485	0.480	0.483	0.375	0.015	0.360	0.390	0.1225	0.093
4	0.497	0.472	0.485	0.375	0.015	0.360	0.390	0.1245	0.095
5	0.488	0.468	0.478	0.375	0.015	0.360	0.390	0.118	0.088
6	0.487	0.476	0.482	0.375	0.015	0.360	0.390	0.1215	0.092
7	0.492	0.473	0.483	0.375	0.015	0.360	0.390	0.1225	0.093
8	0.496	0.471	0.484	0.375	0.015	0.360	0.390	0.1235	0.094
9	0.487	0.482	0.485	0.375	0.015	0.360	0.390	0.1245	0.095
10	0.495	0.476	0.486	0.375	0.015	0.360	0.390	0.1255	0.096
11	0.487	0.483	0.485	0.375	0.015	0.360	0.390	0.125	0.095
12	0.481	0.473	0.477	0.375	0.015	0.360	0.390	0.117	0.087

OUTSIDE DIA. Permissible +- 0.038								
Tube	highest	lowest	Nominal	Tolerance	min	max	min	max
1	0.486	0.478	0.375	0.038	0.337	0.413	0.149	0.065
2	0.487	0.480	0.375	0.038	0.337	0.413	0.150	0.067
3	0.485	0.480	0.375	0.038	0.337	0.413	0.148	0.067
4	0.497	0.472	0.375	0.038	0.337	0.413	0.160	0.059
5	0.488	0.468	0.375	0.038	0.337	0.413	0.151	0.055
6	0.487	0.476	0.375	0.038	0.337	0.413	0.150	0.063
7	0.492	0.473	0.375	0.038	0.337	0.413	0.155	0.060
8	0.496	0.471	0.375	0.038	0.337	0.413	0.159	0.058
9	0.487	0.482	0.375	0.038	0.337	0.413	0.150	0.069
10	0.495	0.476	0.375	0.038	0.337	0.413	0.158	0.063
11	0.487	0.483	0.375	0.038	0.337	0.413	0.150	0.070
12	0.481	0.473	0.375	0.038	0.337	0.413	0.144	0.060